International Journal of Mathematics and Statistics Invention (IJMSI)
E-ISSN: 2321 – 4767 || P-ISSN: 2321 - 4759
www.ijmsi.org || Volume 2 || Issue 2 || February - 2014 || PP-55-71

Hierarchical Component Using Reflective-Formative Measurement Model In Partial Least Square Structural Equation Modeling (Pls-Sem)

Wan Mohamad Asyraf Bin Wan Afthanorhan
Department of Mathematics,
Faculty of Science and Technology,
Universiti Malaysia Terengganu, 21030 Kuala Terengganu, Malaysia

ABSTRACT: *In recent years, partial least square structural equation modeling has been enjoyed popularly since the various package for partial least square established. Besides, this method can be known as the the next second generation modeling or soft modeling that can be a great helpful among the researchers and practitioners to accomplish their objective research. In this paper also intend to modeling the second higher order construct (Hierachical Component) as the advance in partial least structural equation modeling (PLS-SEM) using smartpls which is the newest package. In this application of this method, we can create a higher order construct, in particular, the reseracher should empahsize for many aspect in order to ensure this model is more relevance and significant. Thus, the application using reflective-formative should be carry out in order to obtain the best model. In some instance, the author present the guideline to conduct this analysis with a real example so that the researchers outside will be more understanding and enjoyed for this new application.*

KEYWORDS: *Partial Least Square Structural Equation Modeling, Hierarchical Component Model, Second Order Construct, Reflective-Formative Model, SmartPls*

I. INTRODUCTION

PLS-SEM has been established for a long time ago by Wold (1982), however, this method is not popular as covariance based structural equation modeling (CB-SEM) in which focuses on goodness of fitness to minimize the covariance matrix and estimation matrix (Hair, 2010) earlier 1980. However, CB-SEM has a lot weakness since the reserchers should be ensure the model has achieved requirement before subsequent analysis in the structural model. In this case, the researcher has been spent time to focus on goodness of fit rather than estimation or prediction.

Therefore, the introduction to PLS-SEM is returned now with a great helpful and more user friendly to curb the problem of researchers nowadays. In the accordance with Hair (2010) discover the PLS-SEM is aimed to maximize the explained variance of the endogenous construct (square multiple correlation, R^2) of the endogenous latent construct (dependent).

This application is performed nonparametric analysis in which does not rely on distributional assumption (Chin, 1998). Thus, this method is appropriate for those who have insufficient data, time and others. However, PLS-SEM is does not assume data to be normal even it appropriate for nonparametric. Thus, the bootstrap in smartpls is used to resampling the data until the data meet the result. According to Byrne (2010), bootstrap is an aid for nonparametric data in structural equation modeling.
Hair (2010) listed several advantages for those who apply PLS-SEM:

- Normality of data distribution not assumend normality
- Can be used with fewer indicator (manifest variable)
- Models can be include a larger number of indcator variable
- Preffered alternative with formative construct
- Assumes all measured variance (including error) is useful for explanation/prediction of causal relationship

The result obtained in t-distribution against CB-SEM since this method is performed nonparametric analysis. In addition, the researcher does not have difficult to apply the formative construct in PLS-SEM. Formative construct in CB-SEM is much complicated than PLS-SEM and, of course, PLS-SEM ease the researchers to perform their analysis regarding on their objective research.

II. FORMATIVE AND REFLECTIVE MEASUREMENT MODEL

In the accordance with Hair (2010) explain measurement model is the process of assigning numbers to a variable/construct based on a set of rules that are used to assign the numbers to the variable in a way that accurately represents the variable. Measurement model have two type which is reflective and formative construct.Usually, researchers endorsed to apply reflective costruct since it much better to conduct the analysis rather than formative. But PLS-SEM defy this thereotically and they have a chance to perform second higher order construct in structural equation modeling. These two measurement model have various purpose but some researchers still confuse to apply its application. Some of them just assume all the measurement model is reflective construct. Therefore, Ringle (2008) has established one article about the Confirmatory Tetrad Analysis in PLS-SEM (CTA-PLS) to differentiate between reflective and formative construct. In this instance, the reserachers should meet the requirement of the bootsrapping confidence interval, composite reliablity and VIF. In this paper intend to address the herarchical component analysis using PLS-SEM type II (Reflective-Formative) model.

Reflective measurement model is a type of measurement model setup in which the direction of the arrow is from the construct to the indicator (manifest variable), indicating the assumption that the construct causes the measurement model (more precisely, the covariation) of the indicator variables (Hair et.al, 2013). Reflective model is performed when the statement is related on the effect of variable. Therefore, the arrow is pointing outward from latent construct imposed on manifest variable.

Formative measurement model is a type of measurement model setup in which the direction of the arrow is from indicator variables to construct, inidcating the assumption that the indicator variable cause the measurement of the construct (Hair, 2013). Formative model is performed when the satement is related on the cause of variable. Therefore, the arrow pointing inward from manifest variable imposed on construct.

In this case, the author intended to apply both measurement models in structural model in order to create a second higher model. A higher model should be taken into account for each relevace and significant, in particular, researcher should be considered to achieve the requirement for reflective and formative construct.
Generally, reflective measurement model are widespread and only a small proportion of SEM-based studies have applied for formative measurement model. On the use of reflective measurement model become a normal practice among researchers to examine their relationship between exogenous and endogenous constructs. In particular, reflective measurement model is much ease to handle rather than formative measurement due to the reflective construct is focus on relevance of indictor while formative construct focus on significant of indicators.

III. ASSESSING OF REFLECTIVE MEASUREMENT MODEL

Following the validation guidelines of Straub et al. (2004) and Lewis et. Al (2005), the reflective measurement model should be tested at least unidimensionality procedure, internal consistency reliability, indicator reliability, convergent validity and discriminant validity in order to achieve the fitness of measurement model. Unidimensionality procedure cannot be conducted directly from PLS-PM, but can be assessed by exploratory factor analysis (EFA) that can be installed in various packages such as SPSS, SAS, MINITAB, EVIEWS and others. Unidimensionality is aimed to drop the item that consists less contribution on these factors. Accurately, the procedure for removal items had two types which is multidimensionality and unidimensionality procedure. Both these procedure plays a same vital role to retain the item which are related on the factor though these procedure looks so different to carry out the research. Usually, researchers prefer value below than 0.50 should be drop from the measurement model (Afthanorhan. 2013). However, it depends on researchers to choose which one of the substantive meaningful regarding on their literature review. In this case, the author addressed 0.60 or above of factor laodings to retain in the measurement model.

Once the unidimensionality procedure has achieved, the traditional method which is internal consistency reliability, Cronbach alpha proposed by Nunnally (1978) has been used. As usual, value higher than 0.70 considered as the meausrement model is reliable. But there is an alternative method tu replace the wekaness of cronbach alpha namely composite reliability. Composite reliability is proposed by Nunally and Bernstein (1994) and most of the researchers concurs to indicate this method is much relible rather than cronbach alpha, since this measure managed to overcome some of cronbach alpaha deficiency.

According to Urbach et. al (2010), indicator reliability describe the extnet to which a variable or set of variables is consistent regarding what it extends to measure. However, in PLS-SEM does not emphasize the purpose of indicator reliability, instead, the significant of indicator can be tested using resampling tecnique such as bootstrapping (Efron 1979) or jacknifing (Miller 1974). There may be various reasons for these requirement not beong fulfilled since the item may ghave influenced by additional factors that can give the untrue estimation. Thus, PLS algorith initiated once more in order to obtain new results.

Convergent validity involves the degree to which individual items reflecting a construct converge in comparison to items measuring different constructs (Urbach et. al, 2010). A common criterion applied to test the convergent validity construct is namely Average Variance Extracted (AVE) proposed by Fornell & Larcker (1981). The formula of AVE is total factor loading power of two divide by number of items consisted. Fornell & Larker suggest the result higher than 0.50 indicate the construct is captured to be explained more than half of the variance of its indicators and thus, demonstrates sufficient convergent validity. In particular, any value in construct below than 0.50 is consists of measurement residual.

Finally,discriminant validity concerns the degree to which the measures of different constructs differs from one another. According to Zainudin (2013), the correlation between exogenous variabes (independent) should be below 0.85 to prove the constructs differs contributions. For the first measures, cross laodings are obtained by correlating each latant variable component scores with all the other items (Chin, 1998). Accordingly, the AVE of each latent variable should be greater than the constructs highest square correlation with any other latent variable.

Validity Type	Criterion	Description	Literature
Unidimensionality	Exploratory Factor Analysis (EFA)	The number of selected factors is determined by the numbers of factors with an eigentvalue greater than 1.0.	Gerbing and Anderson (1988)
Internal Consistency Reliability	Cronbach Alpha	Should be greater than 0.70 to achieve the reliable of measurement model	Nunally (1978)
Internal Consistency Reliability	Composite Reliability	Alternative to Cronbach Alpha that attempt to measure the sum of an LV's factor loadings relative to the sum of the factor loadings plus error variances	Nunally and Bernstein (1994)
Indicator Reliability	Indicator Loadings	Measures how much of the indicators variance is explained by the coresponding latent variables.	Chin (1998)
Convergent Validity	Average Variance Extracted (AVE)	Proposed threshold value for AVE should be higher tahn 0.50	Fornell and Larcker (1981)
Discriminant Validity	Fornell-Larcker criterion	The AVE of each latent variable should be greater than the latent variable highest squared correlation with any other latent variable	Fornell and Larcker (1981)

Exhibit 1

IV. ASSESSING OF FORMATIVE MEASUREMENT MODEL

The validation of formative measurement model requires a different approach than the reflective measurement model. Conversely, conventional validity assessments do not apply to formative measurement models, and the concepts of reliability and construct validity are not meaningful when employing such models (Bollen 1984; 1989). According to Ringle et. al (2013), the assessment of the formative constructs convergent validity by examining its correlation with an alternative measures of the constructs, using reflective measures or a global single item. The correlation between the construct should be higher than 0.80.

The collinearity should be considered in formative measurement model in the subsequent analysis. Thus, tolerance represents the amount of variance of one formative indicator not explained by the other indicators in the same block. Each indicator tolerance VIF should be in range between 0.20 and 5.0. Otherwise, obliterate indicators, merging indicators in a single measure, or creating higher order construct to treat collinearity problem. The higher order construct consists of four type that has been suggested by Ringle (2011) as well as Hanseler (2009). In this instance, the author intend to apply second order construct type II or higher component model (HCM) type reflective-formative measurement model.

The prior assessment in higher order construct should be test each indicator's outer weight and outer loadings as well. The resampling technique is used here to assess their significance for each indicator. When indicator weight (factor loading for formative construct) is significant, there is empirical support to retain the indicator. Nevertheless, when an indicators weight is not significant but the corresponding outer loading is significant (factor loading for reflective measurement model > 0.60), the indicator should be retained.In short, if both outer loading and outer weight is non-significant, there is no empirical support to retain the indicators it should be dropped from the model. Apparently, the researchers should illuminate the reasons to retain or delete the indicators by examining its pedagogical theoretical relevance (reflective) and importance (formative) of the same constructs.

If the theory driven conceptualization of the construct strongly supported retaining the indicators, it should be kept in the formative constructs. But, if the conceptualization does not strongly support an indicator inclusion, the insignificant indicator should most likely to be removed (Ringle et. al, 2013). In contrast, if the outer loading is low and non-significant, there is no empirical support to retain the indicator in a model (Cenfetelli & Bassellier, 2009). Therefore, such an indicator should be removed from the formative measurement model to equip their fitness with significant of relevance and importance.

Accordingly, both significant and insignificant formative indicators should be kept in the measurement model as long as this is conceptually justified (Henseler et al. 2009). Unlike the reflective measurement model that should be achieve their conventional validity. The different criterion for assessing formative construct is summarized in exhibit table below:

Validity Type	Criterion	Description	Literature
Indicator Validity	Indicator weight	The reflective measurement model should be achieve their relevance in which higher than 0.60. Some of the authors also recommend path coefficient (estimation) should be greater than 0.10 or 0.20	Chin (1998b), Lohmöller (1989)
Indicator Validity	Variance Inflaction Factor (VIF)	Indicates how much of an indicators variance explained by other influences in a model. Should be higher than 0.20 but lower than 5.0. Otherwise, remove indicator, emerging in single index, or create higher order construct.	Cassel and Hackl (2000), Diamantopoulos and Siguaw (2006), Fornell and Bookstein (1982), Gujarati (2003), Ringle et.al (2013)
Construct Validity	Interconstruct Correlations	If the correlation between construct is below than 0.85 indicates that the constructs is differ sufficient from one another. The differ sufficient provide an importance construct.	Mackenzie et al. (2005), Bruhn et al. (2008)

Exhibit2

V. SINGLE ITEM AND MULTIPLE ITEM MEASURES

Single item is very rarely to be used among researcher when comes to determine the interrelationship between exgenous and endogenous construct. However, single items have practical advantages such as ease of application, brevity, and lower costs associated with their use (Hair et. al, 2013). In CB-SEM application, single item cannot be handling when the reserachers intend to use unidimensionality procedure due the identification problem. Identification issues usually exist when the latent construct consists below four indicators. This is because the data cannot be computed since the lower degree of freedom. Thus, the reserachers figure out another ways to solve this problem. They established pooled confirmatory factor analysis CFA since this application can be handle the construct below than four. But PLS-SEM is much easy to handle since this method can use a single item for estimation. Note that, contrary to commonly held beliefs, single item reliability can be estimated (Loo, 2002; Wanous, Reichers, & Hudy, 1997). Most importantly, from a perspective, opting a single item measures in most empirical settings is a risky decision when it comes to predict vaidity considerations.

Multiple items measures have been interested among the researchers to analyze their data. They developed the item based on their literature and of course the result obtained would be less decison risk since multiple measure encomprises for whole aspect relevance. Once again CB-SEM present their weakness when this application cannot be handled when items is too many and as usual PLS-SEM is the alternative method to overcome these issues. Therefore, PLS-SEM has been popular lately since this application is user friendly and more understanding.

VI. HIERARCHICAL COMPONENT MODEL USING PLS-SEM IN SMARTPLS 2.0

Hierarchical latent variable models, hierarchical component models, or higher-order constructs, are explicit representations of multidimensional constructs that exist at a higher level of abstraction and are related to other constructs at a similar level of abstraction completely mediating the influence from or to their underlying dimensions (Chin, 1998b). Law et al. (1998, p. 741). Establishing such a higher model component usually called in the context of PLS-SEM (Lohmoller,1989) most often involve testing second oder constructs that contain two layers of constructs.

In generals, hierarchical component model (HCM) is rarely been used since this modeling implement for two stage approach. Two stage approaches is initiated once the researchers apply for formative measurement model. Unfortunately, some of researchers grouse to determine whether their model is appropriate for reflective or formative measurement model. Therefore, Hair (2009) introduce to Confirmatory Tetrad Analysis (CTA-PLS) to guide the researchers differentiate these measurement model. Additionally, there are threefolds for the inclusion of an HCM in PLS-SEM. First, by establishing HCMs, researchers can reduce the number of indicators in a structural model besides making the model more parsiminous and ease to to grasp. Secondly, HCMs prove valuable if the construct are highly correlated. In statistics regression, a highly correlated tends to exist the multicollinearity problem. Thus, the estimation of the structural model may be biased due to the collinearity issue and the conventianal validity cannot be feasible. In situations characterized by collinearity among constructs, a second order can remedy such collinearity issues and may solved discriminant validity. Thirdly, establishing of HCMs can also prove valuable if formative indicators exhibit high levels of collinearity. Provided that theory supports this step, researchers can split up the set of indicators and establish separate constructs in a higher order structure (Ringle et. al, 2013). Forth, formative measurement model in PLS-SEM is much ease to handle rather than CB-SEM that can ascertain the researcher to consider for both measurements at one time. Fifth, the result provided also include for formative and reflective mesurement model, thus, the researchers can make a comparison for both measurement. Sixth, modeling hierarchical component model is useful for researchers to reframe the structure model to be more meaningfull besides to address the predicton rather than the process of evaluation in structural model. Sevently, introduction to hierarchical component model proposed by Ringle (2012) in PLS-SEM causes some of the researchers in curious to determine the comparison of these component model, therefore, modeling of HCMs widespread and enjoyed to popularly applied.

HCMs prove as the higher order model since the researchers should ensure all the requirements and evaluation coincide the concept of advance in PLS-SEM. Instead of CB-SEM in which rely on distributional assumption before further the analysis, PLS-SEM is managed to increase the explained total variance in each constructs. Exhibit 3 illustrates the four main types of HCMs discussed in the extant literature (Jarvis et.al, 2003; Wetzels et al.,2009) and used in applications (Ringle, 2012). These types of model have two elements: the Higher Order Component (HOC), which captures the more abstract entity, and the lower order component (LOC) which captures sub-dimensions of the abstract entity. Each of the HCMs types is characterized by different relationship betwen the HOC and LOCs and construct and their indicators.

Reflective-Reflective Type I	Reflective-Formative Type II
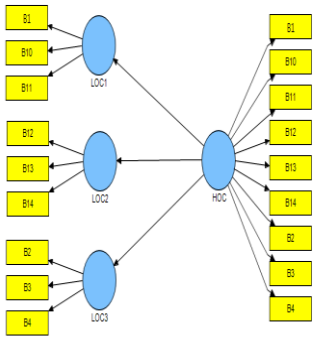	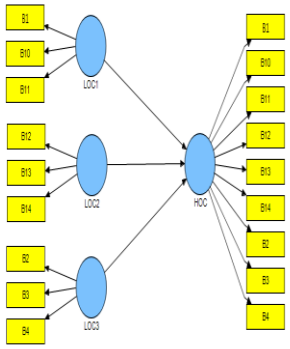
Formative-Reflective Type III	**Formative-Formative Type IV**
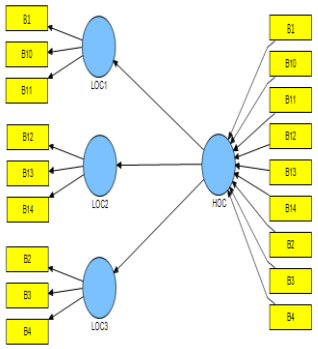	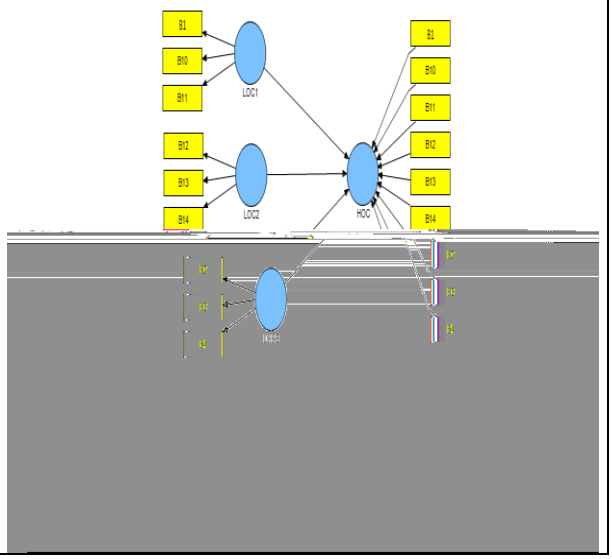

Types of Hierarchical Component Model (Ringle et al.,2012)
Note: LOC = Lower- Order Component; HOC = Higher-Order Component

One of the most applied in structural equation modeling among researchers nowadays is **Reflective-Reflective Measurement Model** known as Second Order Construct Type I. In particular, the causal path of lower-order constructs are imposed on associated of observed variable (item) enclosed in rectangular shapes and at the same time the causal path of

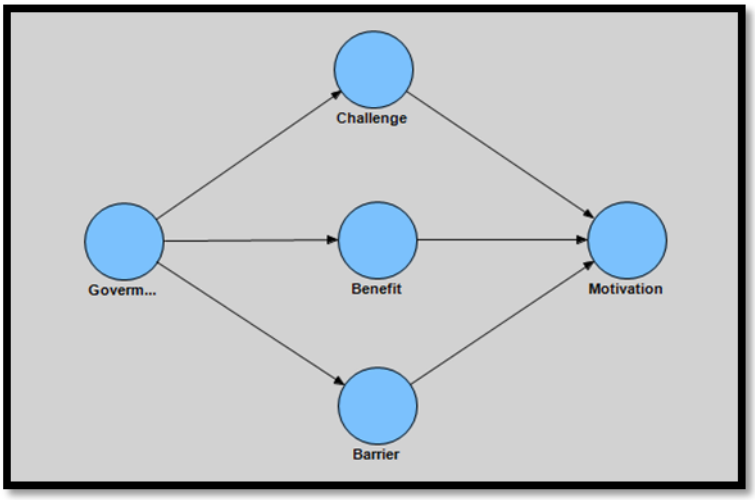

Figure 1

IX. RESULT AND FINDINGS

Previously, the reflective measurement model should be determined to drop the indicator which has less contribution in a model. In particular, this procedure namely unidimensionality or multidimensionality procedure is aimed to drop the indicator (items) below 0.60. Otherwise, indicators should be retained in a model and subsequent analysis will be feasible to create a higher model. Again, a higher order model could be performed when the second order construct employ in a structural model. In this instances, the researchers should ensure all of the factor loadings obtained triumph the same direction and highly significant. Once the multidimensionality procedure has been conducted, the composite reliability, convergent and discriminant validity should be performed. Repeatedly, structural model is inadmissible once reliability and validity fail to meet the requirement since this approach has been acknowledge for all infamous researchers.

The figure 2 presented measurement model for whole construct after having PLS algorithm. PLS algorithm is supportive to provide the factor loading for each manifest variable (indicators) encomprises in each constructs. The value obtained can be seen between manifest variable and latent construct in which upper causal path. By inspecting through the value obtained in structural model, researchers could recognize which value has less factor loading. The lower factor loadings indicate the lower contribution on these factors. Once researchers identify the lowest factor loading (< 0.60), an item should be deleted at once in a time to meet the minimum criterion. Most of the researchers knew the process to conduct multidimensionality procedure but the way they used is still incorrect. To make the better approach in multidimensionality procedure, researchers should drop the lowest factor loading once in a time, and repeat this process untill meet the requirement to achieve upper than 0.60.

In order to avoid from an ambiguity explanation, let see the Figure 2 presented, the first thing is certify all the factor loading having the same direction (all positive value) in each constructs. In this case, the latent (unobserved) construct have four manifest variable (indicators) namely Bar5, Bar6, Bar7, and Bar8 consist in negative value. Means that, these manifest variable should be recoding since having the vice versa direction (e.g: 5 = strongly disagree, 4 = disagree, 3 = undecided, 2 = agree, and 1 = strongly agree) using other application such as SPSS or ther appropriate package. Usually, perceived negative value obtained caused by negative statement in questionnaire provided. Therefore, the author re-do the latent construct for Barrier only and re-run the analysis using PLS algorithm. Finally, the result in confirmatory factor analysis is achieved the same direction (all positive value) and the subsequent analysis to identify the lowest factor loading as the explanation has been given.

The multidimensionality procedure is conducted untill meet the requirement as presented in Figure 3. To be more undoubtedly, researchers outside should be show their step by step before show the final modeling in multidimensionality. In this case, the author skip several step since the current paper is to outline the hierarchical component model (HCM). Thus, the result for confirmatory factor analysis can bee see in "A Comparison of Partial Least Square Structural Equation Modeling and Covariance Based Structural Equation Modeling for Confirmatory Factor Analysis" written by Afthanorhan (2013). This article will guide researchers to apply the confirmatory factor analysis using PLS-SEM and an advantages PLS-SEM in multivariate analysis. Once the reflective measurement achieve the requirement, now author proceeds the formative construct (Figure 4) to equip a second higher order construct (reflective-formative construct).

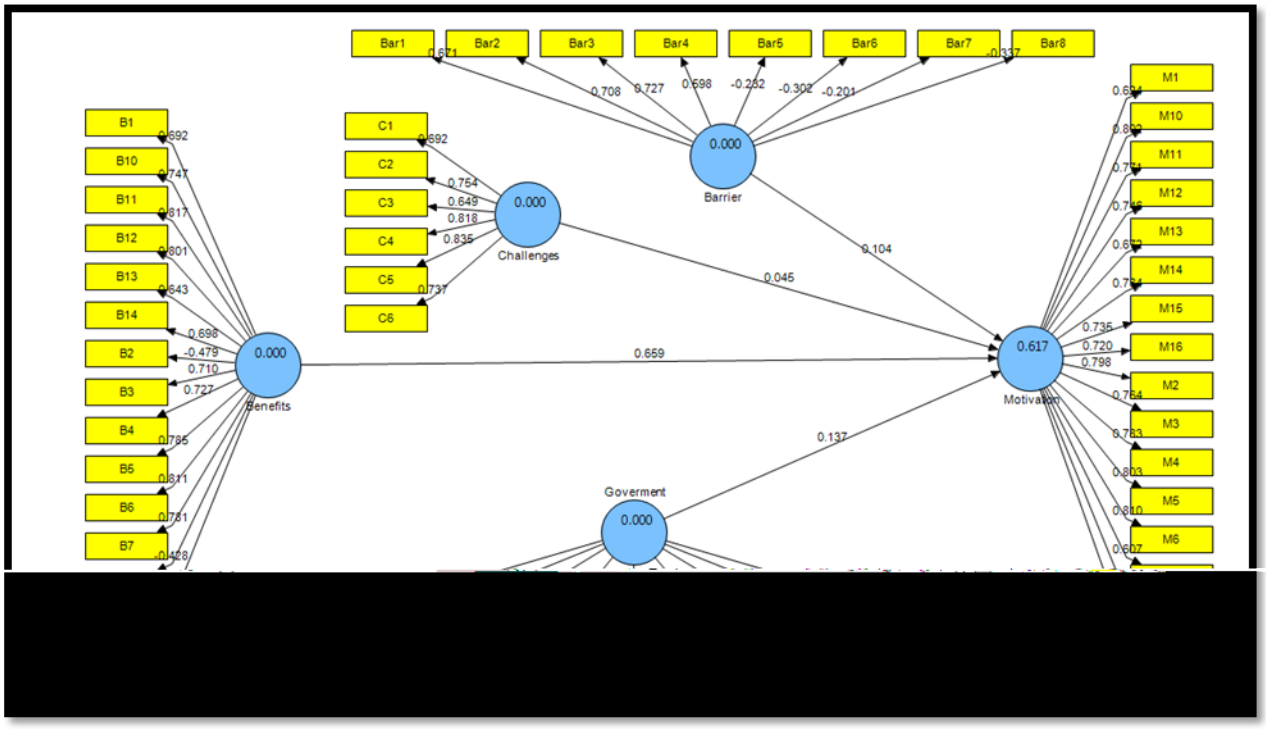

Figure 2

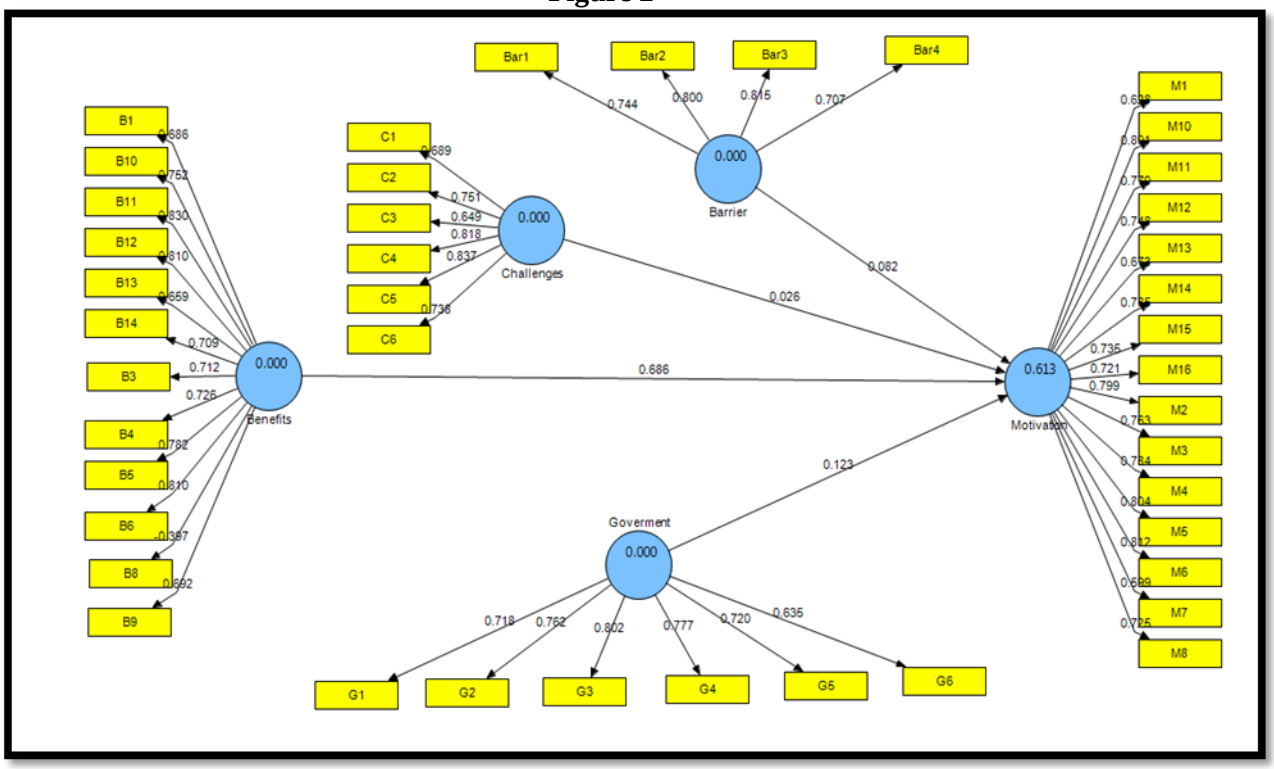

Figure 3

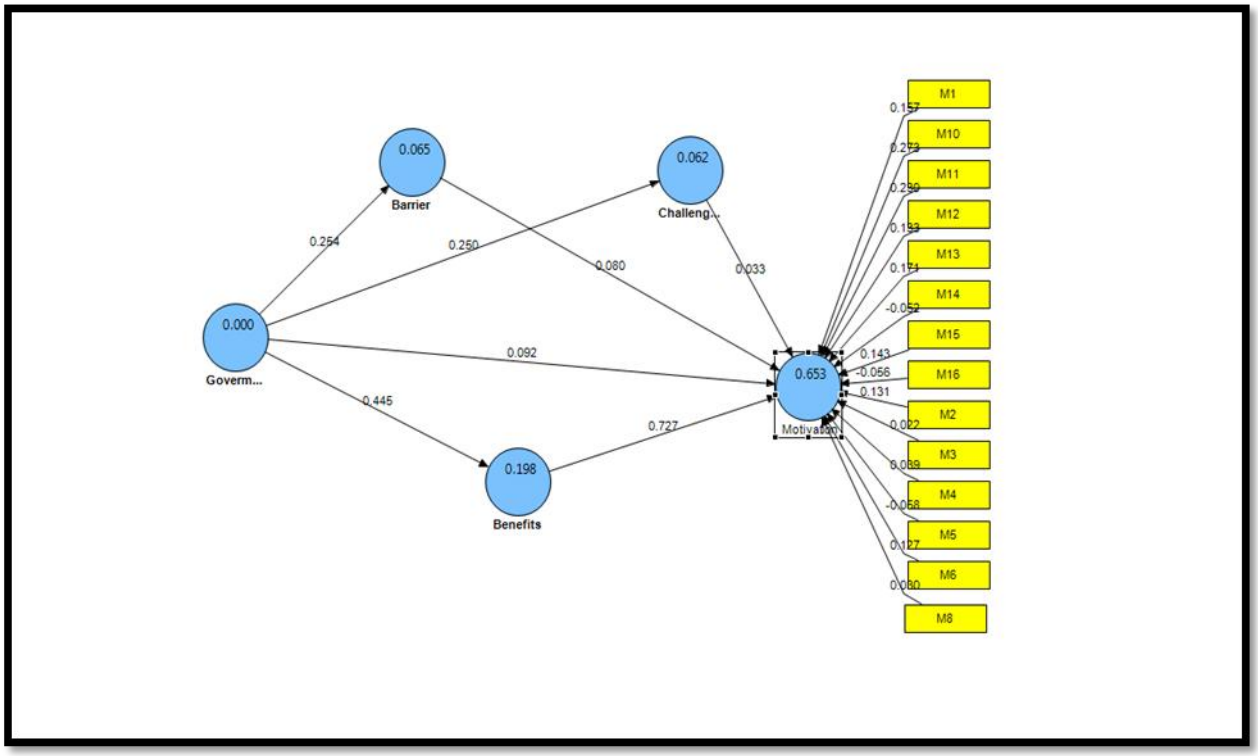

Figure 4

On the subsequent analysis, the formative measurement model will be employ in a structural model coincide the objective research in this presented paper. In this case, endogenous (dependent) variable namely motivation (14 manifest variables) will be transform to formative measurement model. Usually, researchers highlight endogenous construct to be formative construct but they do not have a strong goal to apply this application. Therefore, the author needs to clarify the endogenous contructs is appropriate for formative construct in order to develop a best model regarding on focusing for both measurement model. Formative measurement model in PLS-SEM is much better to handle rather than CB-SEM because the researchers do not need plentiful step to develop formative model. In other words, the usage of PLS-SEM is provided tremendous benefits to all researchers and practitioners recently to apply structural equation modeling in their research. In PLS-SEM using SmartPLS 2.0, the researchers needs to click on invert measurement model to change the direction of causal path from manifest variable inwards to latent construct.

Thus, the value provided between latent constructs and manifest variable in Figure 4 is reformed after re-run the PLS algorithm. The result presented in PLS-SEM is the outcome for formative construct and of course the subsequent analysis to determine the significant value using bootstrapping should be applied. Once the value provided is significant after having bootstrapping technique, the manifest variable should be retained since in conceptually the significant values have effect on the factors. If not, the researchers possible to drop or retain the manifest variable as long the cause (reflective measurement model) meet the requirement. In formative measurement model, the criterion needed is not so simple as reflective measurement model to achieve all reliability and validity, instead, the vitro in flaction (VIF) should be presented to evaluate the best formative measurement model. As recomended by Ringle et. al (2013), VIF from 0.20 through 5.0 indicates the best formative measurement model.

Statement	VIF
I want to learn something new.	1.707
I want to work with people	2.839
I feel it is my duty as a citizen.	2.787
It fulfills my moral principles.	2.969
I see it as the opportunity to make a difference.	3.069
I want to help community.	2.976
I want to improve my resume.	1.781
I want to occupy my free time.	2.158
It is a requirement/expectation by university, faculty, school, religious center or another agency.	1.285
Volunteering is good for my professional development.	2.618
Volunteering gives me the opportunity to make new friends.	2.472
I believe my skills can be useful to the community	2.259
Volunteering is a social stimulation	1.804
I enjoy the volunteer activities	2.612
I want to help my society or close friends	2.119
Volunteerism helps me feel better about myself	2.236

Exhibit 3

As we can see in Exhibit 3, all VIF provided in each manifest variable is achieve the requirement for formative measurement model. Previously, the author outlined the endogenous variables only, thus the result for motivation construct should be adequate to subsequent analysis on herarchical component analysis. VIF can be analyzed using various packages such as SPSS, Eviews, Minitab and others. In this case, the author using SPSS to obtain the collinearity statistics for motivation constructs in order to achieve the criterion for formative construct. On focusing of hierarchical component analysis, all manifest variable enclosed in rectagular associated in motivation construct will be condensed to 7 newly latent constructs. In other words, the manifest variable provided initial of 14 items will be divided into each established latent constructs (e.g: M1 and M10 = MA, M11 and M12 = MB, M13 and M14 = MC and so forth). The establishing new latent construct can help the researcher grasp a result and elude confused in a structural model. Additionally, all the established new latent construct should be pointing on motivation construct (endogenous) while other all manifest variable enclosed in rectangular pattern should be hide in measurement model (motivation) so that the modeling of second order higher construct will be more clearly and orderly. Once again PLS-SEM show the powerful analysis when this application managed to hide the manifest variable in the construct as presented in Figure 5.

Once the setup of model has been complete, as usual researchers should re-run the analysis using PLS algorithm and bootstrapping technique to provide the t-studenditized. A t-test is useful for researchers to determine the research hypothesis regarding on family wise error rate (alpha). Basically, value higher than 1.96 suppose to be significant and otherwise nonsignficant. However, the explained variance enclosed in motivation construct show 1.00 of total variation. Means that, the total variation that has been explained from other construct which is endogenous construct is approximately 100 percent. The result obtained is overestimated when apply this application. In order to deter numerous of newly latent construct existed the author suggest to use single index or single observed variable that can be provided in latent variable score in PLS-SEM using smartpls. In the context to create a higher model without overestimated explained variance as well as reduce latent construct, a single measure should be employed. On the use of single measure, researchers should copy paste the result of latent variable score obtained from default report into spreadsheet Microsoft Excel. Of checking through the value, the product for newly latent variable also given with the t-test. Derived from that result, the author deleted all the manifest variable and newly latent construct so that we can focus on single variable. The example result of latent variable score can be seen in Exhibit 4 in which in originals, the result obtained should be abundant of data set but in order to illuminate the explanation transparent, the author present just a little bit of an example.

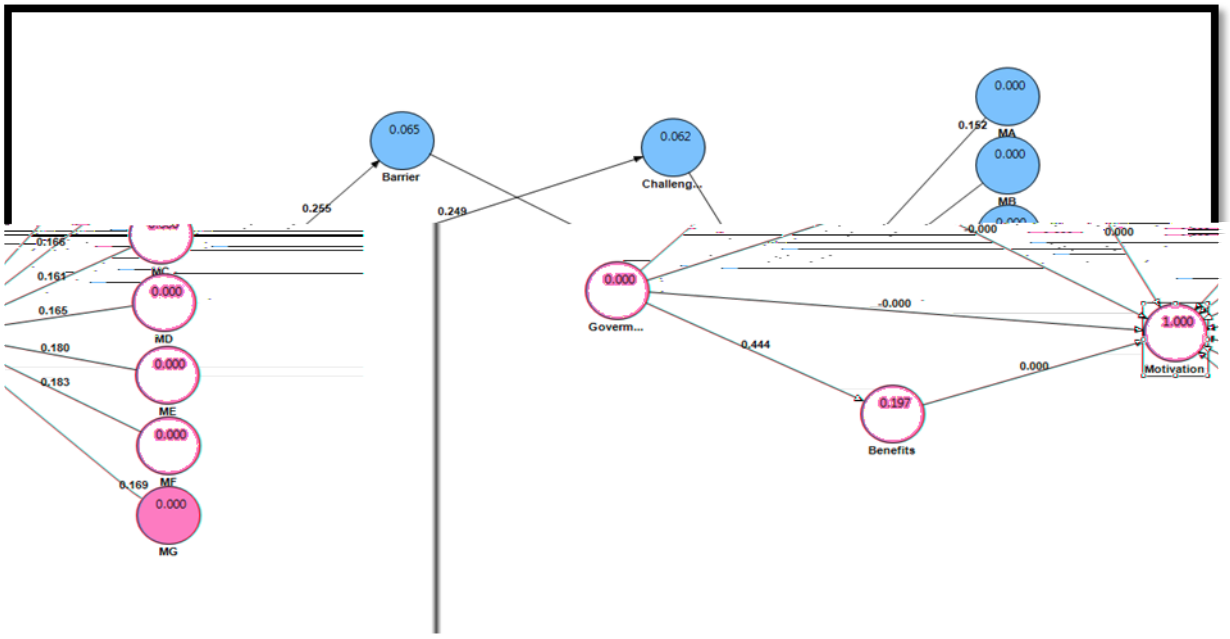

Figure 5

0.3002	-0.2203	1.8848	0.1549	-0.3678	-0.1003
0.6967	-0.2219	0.6658	0.7362	-0.3678	-0.5203
0.3002	0.9345	0.6658	0.1549	0.312	0.4847
-0.0436	0.7945	-0.1982	1.3689	1.0028	1.2464
-0.6848	0.9121	-0.9482	-1.9017	0.323	0.0348
-0.3244	0.5105	0.6019	0.8031	-1.0586	0.2743
1.7075	0.8044	1.5547	-0.4353	1.0028	1.1444
-1.1071	0.2507	0.2553	-1.615	0.312	0.9087
0.3002	1.0514	-0.1591	1.3689	0.323	0.4709

Exhibit 4

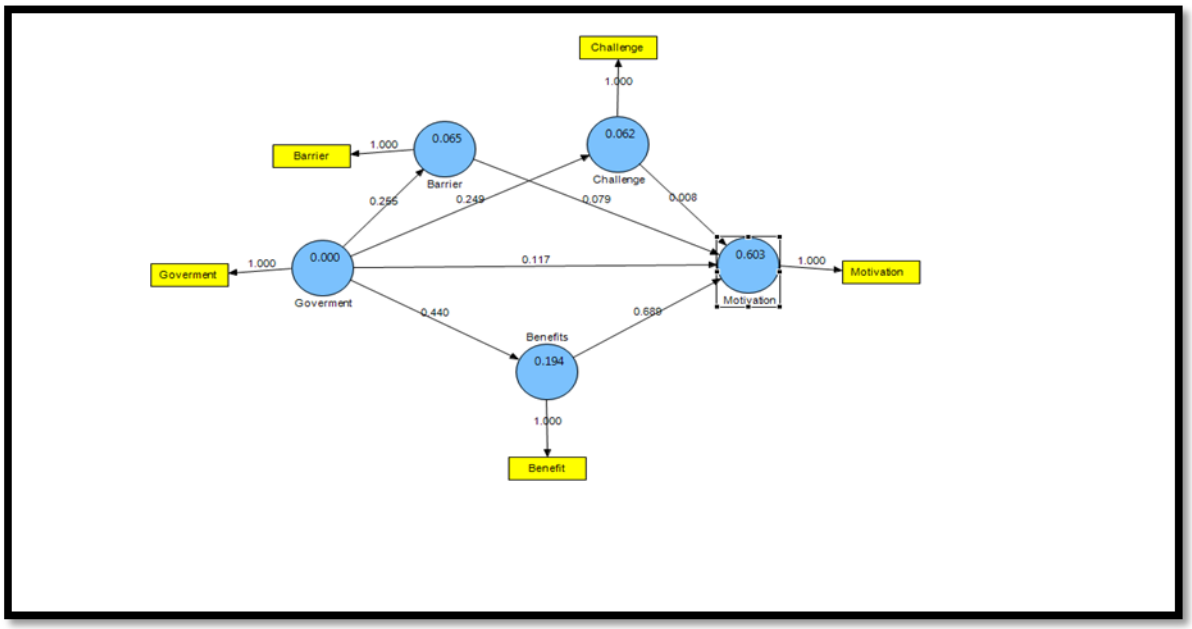

Figure 6

Using on the same structural model, the researchers should create a new project in Smartpls to use a new data set that will be implement in the structural model. As mention earlier, the author intend to use the single measurement index in a structural model, of course, the researchers should re-do the analysis using new indicator provided from new data set. In shortly, latent variable score mainly from Exhibit 6 will be implementing in Figure 6. Now, lets examine the explained variance in endogenous constructs namely motivation, variance is totally difference rather than previous one in particular (Figure 5 = 1.000 to Figure 6 = 0.603) plus can be proved that the single measurement indicator also can be helpful in data analysis. Yet, analysis on hierarchical component analysis should not be stopped here since the author intend to address the most significant impact using five variables in partial least square. In social science, significant impact between construct is prior to determine positive relationship, negative relationship as well as the impact of research applied using statistical methods.

Therefore, the author present the results of path coefficient between endogenous (dependent) and exogenous (independent) variables similar to the objective research. As usual, bootstrapping technique should be applied to indicate the significant path. Indeed, PLS-SEM is using non-parametric method in structural equation modeling but Smartpls is developed not to to assume the data set to be normal. Thus, the resampling technique (boostraping) is useful for any researchers that not achieved any requirement provided in CB-SEM. According to Byrne (2010) discover bootstrap is an aid technique for non-normal data and can be a great helpful for those who not achieve the normality procedure. In this case, the author adjust the cases to be 453 in which should be valid to evade the significant result are sistematically biased. Besides, using 5,000 bootstrap samples are recommended in Smartpls. In the accordance with Ringle et. al (2013) claims this distribution (5,000 samples) is possible to determine the standard error and standard deviation of the estimated coefficient.

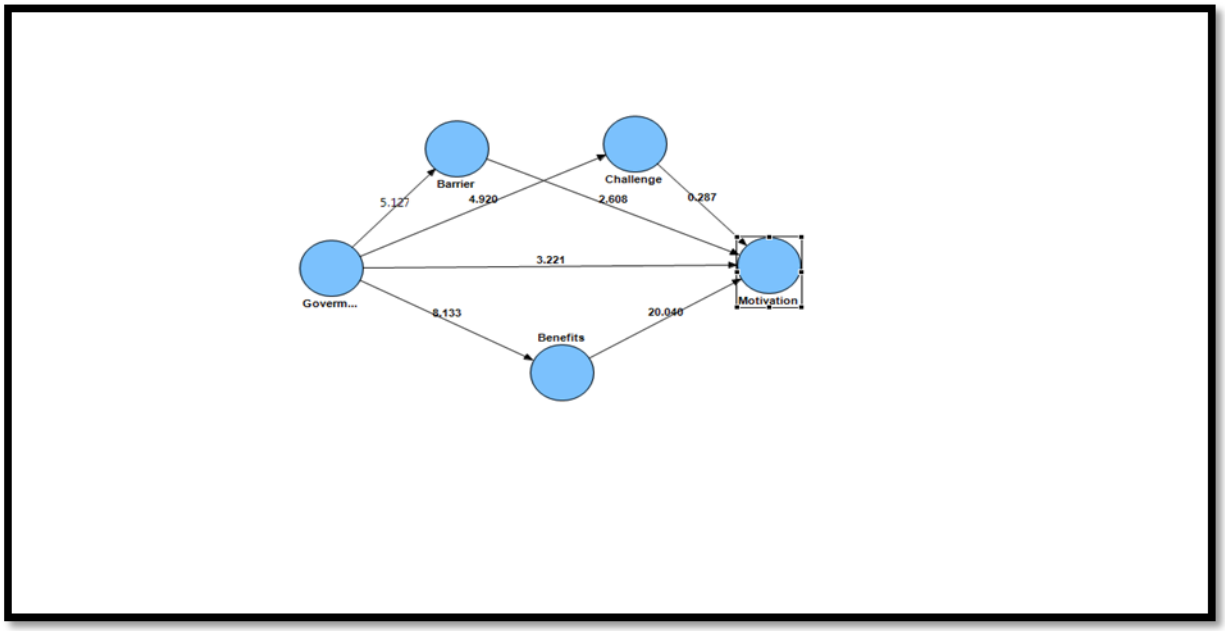

Figure 7

	Original Sample (O)	Sample Mean (M)	Standard Deviation (STDEV)	Standard Error (STERR)	T Statistics (|O/STERR|)
Barrier -> Motivation	0.0787	0.0802	0.0302	0.0302	2.6077
Benefits -> Motivation	0.6887	0.6854	0.0344	0.0344	20.0396
Challenge -> Motivation	0.0084	0.0033	0.0292	0.0292	0.2871
Goverment -> Barrier	0.2548	0.2583	0.0497	0.0497	5.1266
Goverment -> Benefits	0.44	0.4424	0.0541	0.0541	8.1333
Goverment -> Challenge	0.2495	0.2546	0.0507	0.0507	4.9202
Goverment -> Motivation	0.1172	0.1208	0.0364	0.0364	3.2209

Exhibit 5

Figure 7 and Exhibit 5 display the final model of hierarchical component analysis through PLS algorithm and bootstrapping technique. By inspecting through t-statistics at the last column in Exhibit 7, almost latent construct indicates have singnificant impact on each other unless one pair construct which is construct of challenge and motivation. With the accordance of Hair et. al (2010) uncover any value in t-test should be higher than 1.96 (a < 0.05) indicates achieved significant level (95% confidence interval). Otherwise should be classify as insignificant or nonimpact occurs.

The first things is the researchers should identify whether the constructs is in positive or negative relationships, afterwards uncover the most contribution factors triggered on this research. In this instances, all of the variables include in a structural model are positive relationship, means that the direction of respondent towards these factors are positive. Mean while, indirect factors involving benefits, barrier and challenges on motivation revealed that benefits factor is the most crucial towards voluteerism program. In conceptually, benefits construct is plausible to consider as the most contribute parallel to the past research. In perpendicular, indirect effect of challenge on motivation (dependent) is perceived insignificant impact. For some instance, challenge factor does not give significant impact on motivation, means that the existence of this factor is failed to provide a significant impact towards this reserach subject. Of standard deviation and standard error is a similar perspective because both parameter is drawn from sample in population. Likewise, standard errors that are extremely large indicate parameters that cannot be determined (Joreskog & Sorbom, 1993). Because standard error are influenced by the units of measurement in observed and/ or latent variables, as well as the magnitude of the parameter estimate itself, no definitive criteria of small and large have been established (Joreskog & Sorbom, 1989).

In this instance, model estimation provided on the basis of PLS algorithm and bootsrapping sampling are helpful to minimize standard error and deviation in the model. Standard error reflects the precision with which a parameter has been estimated, with a small values suggesting accurate estimation. Nevertheless, most researchers do not emphasize this issue on their report because the aimed of the research is to evaluate and provide a good precison using a particular step approach.

X. CONCLUSION AND RECOMMENDATION

For some instances, as usual, one conclusion should be made regarding on our analysis so that the readers will discern our contribution for this research. A second order construct can be known as two stage approach once the implementation of formative measurement model in a structural model. In this instance, we should ensure all the outer loadings and outer weights meet the requirement based on our literature previous. Afterwards, establish several latent constructs rely on a total of items included. In this case, the author employed two items from the origin model into each new latent constructs. In order to solve the total variation in each endogenous construct especially of motivation construct (1.00), a subsequent analysis is perceived using latent variable scores to let the researcher to report a single index/ single item to be implement in a new structural model. To date, an objective research of this paper to highlight the guidelines for researchers to apply hierarchical component analysis is managed.

For drawing the conclusion on prediction of these variables in a structural model parallel in the nature of social sciences, benefits variable is a most meaningful to impact on motivation variables in presented results. Therefore, one perspective can be drawn that a second order construct is not just a powerful in modeling of PLS-SEM but tends to produce a true estimation in which remedy the standard error acquired in multivariate analysis. Last but not least, one of the suggestion through walk of the PLS-SEM for didactic as well as space reasons, goodness of fit statistics should be provided to measure to what extent the fitness of measurement and structural model in the analysis. Otherwise, the commentary for some researchers to execute this application will be constantly in negative view due to the weakness of evaluation method.

XI. ACKNOWLEDGEMENT

Special thanks, tribute and appreciation to all those their names do not appear here who have contributed to the successful completion of this study. Finally, I'm forever indebted to my beloved parents, Mr. Wan Afthanorhan and Mrs. Parhayati who understanding the importance of this work suffered my hectic working hours.

XII. AUTHOR BIOGRAPHY

Wan Mohamad Asyraf Bin Wan Afthanorhan is a postgraduate student in mathematical science (statistics) in the Department of Mathematics, University Malaysia Terengganu. He ever holds bachelor in statistics within 3 years in the Faculty of Computer Science and Mathematics, UiTM Kelantan. His main area of consultancy is statistical modeling especially the structural equation modeling (SEM) by using AMOS, SPSS, and SmartPLS. He has been published several articles in his are specialization. He also interested in t-test, independent sample t-test, paired t-test, logistic regression, factor analysis, confirmatory factor analysis, modeling the mediating and moderating effect, bayesian sem, multitrait multimethod, markov chain monte carlo and forecasting.

REFERENCES

[1] Becker, J.-M., Rai, A., Ringle, C. M., & Völckner, F. (2013). Discovering Unobserved Heterogeneity in Structural Equation Models to Avert Validity Threats. MIS Quarterly, 37(3), 665-694.

[2] Coelho, P. S., & Henseler, J. (2012). Creating customer loyalty through service customization. European Journal of Marketing, 46(3/4), 331-356. doi: 10.1108/03090561211202503

[3] Dijkstra, T. K., & Henseler, J. (2011). Linear indices in nonlinear structural equation models: best fitting proper indices and other composites. Quality & Quantity, 45(6), 1505-1518. doi: 10.1007/s11135-010-9359-z

[4] Furrer, O., Tjemkes, B., & Henseler, J. (2012). A model of response strategies in strategic alliances: a PLS analysis of a circumplex structure. Long Range Planning, 45(5-6), 424-450. doi: 10.1016/j.lrp.2012.10.003

[5] Gudergan, S. P., Ringle, C. M., Wende, S., & Will, A. (2008). Confirmatory Tetrad Analysis in PLS Path Modeling. Journal of Business Research, 61(12), 1238-1249.

[6] Hair, J. F., Hult, G. T. M., Ringle, C. M., & Sarstedt, M. (2014). A Primer on Partial Least Squares Structural Equation Modeling (PLS-SEM). Thousand Oaks: Sage.

[7] Hair, J. F., Ringle, C. M., & Sarstedt, M. (2011a). PLS-SEM: Indeed a Silver Bullet. Journal of Marketing Theory and Practice, 18(2), 139-152.

[8] Hair, J. F., Ringle, C. M., & Sarstedt, M. (2011b). The Use of Partial Least Squares (PLS) to Address Marketing Management Topics: From the Special Issue Guest Editors Journal of Marketing Theory and Practice, 18(2), 135-138.

[9] Hair, J. F., Ringle, C. M., & Sarstedt, M. (2012). Partial Least Squares: The Better Approach to Structural Equation Modeling? Long Range Planning, 45(5-6), 312-319.

[10] Hair, J. F., Ringle, C. M., & Sarstedt, M. (2013). Partial Least Squares Structural Equation Modeling: Rigorous Applications, Better Results and Higher Acceptance. Long Range Planning, 46(1-2), 1-12.

[11] Hair, J. F., Sarstedt, M., Pieper, T. M., & Ringle, C. M. (2012). Applications of Partial Least Squares Path Modeling in Management Journals: A Review of Past Practices and Recommendations for Future Applications. Long Range Planning, 45(5-6), 320-340.

[12] Hair, J. F., Sarstedt, M., Ringle, C. M., & Mena, J. A. (2012). An Assessment of the Use of Partial Least Squares Structural Equation Modeling in Marketing Research. Journal of the Academy of Marketing Science, 40(3), 414-433.

[13] Hansmann, K.-W., & Ringle, C. M. (2005). Strategies for Cooperation. In T. Theurl & E. C. Meyer (Eds.), Competitive Advantage of the Cooperatives' Networks (pp. 131-152). Aachen: Shaker.

[14] Henseler, J. (2010). On the Convergence of the Partial Least Squares Path Modeling Algorithm. Computational Statistics, 25(1), 107-120. doi: 10.1007/s00180-009-0164-x

[15] Henseler, J. (2012a). PLS-MGA: A non-parametric approach to partial least squares-based multi-group analysis. In W. A. Gaul, A. Geyer-Schulz, L. Schmidt-Thieme & J. Kunze (Eds.), Challenges at the Interface of Data Analysis, Computer Science, and Optimization (pp. 495-501). Berlin, Heidelberg: Springer.

[16] Henseler, J. (2012b). Why generalized structured component analysis is not universally preferable to structural equation modeling. Journal of the Academy of Marketing Science, 40(3), 402-413. doi: 10.1007/s11747-011-0298-6

[17] Henseler, J., & Chin, W. W. (2010). A comparison of approaches for the analysis of interaction effects between latent variables using partial least squares path modeling. Structural Equation Modeling, 17(1), 82-109. doi: 10.1080/10705510903439003

[18] Henseler, J., & Fassott, G. (2010). Testing Moderating Effects in PLS Path Models: An Illustration of Available Procedures. In V. Esposito Vinzi, W. W. Chin, J. Henseler & H. Wang (Eds.), Handbook of Partial Least Squares: Concepts, Methods and Applications (pp. 713-735). Berlin et al.: Springer.

[19] Henseler, J., Fassott, G., Dijkstra, T. K., & Wilson, B. (2012). Analysing quadratic effects of formative constructs by means of variance-based structural equation modelling. European Journal of Information Systems, 21(1), 99-112. doi: 10.1057/ejis.2011.36

[20] Henseler, J., Ringle, C. M., & Sarstedt, M. (2012). Using Partial Least Squares Path Modeling in International Advertising Research: Basic Concepts and Recent Issues. In S. Okazaki (Ed.), Handbook of Research in International Advertising (pp. 252-276). Cheltenham Edward Elgar Publishing.

[21] Henseler, J., Ringle, C. M., & Sinkovics, R. R. (2009). The Use of Partial Least Squares Path Modeling in International Marketing. In R. R. Sinkovics & P. N. Ghauri (Eds.), Advances in International Marketing (Vol. 20, pp. 277-320). Bingley: Emerald

[22] Henseler, J., & Sarstedt, M. (2013). Goodness-of-fit indices for partial least squares path modeling. Computational Statistics, 28(2), 565-580. doi: 10.1007/s00180-012-0317-1

[23] Henseler, J., Wilson, B., Götz, O., & Hautvast, C. (2007). Investigating the moderating role of fit on sports sponsoring and brand equity: a structural model. International Journal of Sports Marketing and Sponsorship, 8(4), 321-329.

[24] Henseler, J., Wilson, B., & Westberg, K. (2011). Managers' perceptions of the impact of sport sponsorship on brand equity. Sport Marketing Quarterly, 20(1), 7-21.

[25] Höck, C., Ringle, C. M., & Sarstedt, M. (2011). Management of Multi-Purpose Stadiums: Importance and Performance Measurement of Service Interfaces. International Journal of Services Technology and Management, 14(2/3), 188-207.

[26] Höck, M., & Ringle, C. M. (2010). Local Strategic Networks in the Software Industry: An Empirical Analysis of the Value Continuum. International Journal of Knowledge Management Studies, 4(2), 132-151.

[27] Kocyigit, O., & Ringle, C. M. (2011). The Impact of Brand Confusion on Sustainable Brand Satisfaction and Private Label Proneness: A Subtle Decay of Brand Equity. Journal of Brand Management, 19(3), 195-212.

[28] Money, K., Hillenbrand, C., Henseler, J., & da Camara, N. (2012). Exploring unanticipated consequences of strategy amongst stakeholder segments: The case of a European revenue service. Long Range Planning, 45(5-6), 395-423.

[29] Okazaki, S., Castañeda, J. A., Sanz, S., & Henseler, J. (2012). Factors affecting mobile diabetes monitoring adoption among physicians: questionnaire study and path model. Journal of Medical Internet Research, 14(6), e183. doi: 10.2196/jmir.2159

[30] Reinartz, W. J., Haenlein, M., & Henseler, J. (2009). An empirical comparison of the efficacy of covariance-based and variance-based SEM. International Journal of Research in Marketing, 26(4), 332-344. doi: 10.1016/j.ijresmar.2009.08.001

[31] Rigdon, E. E., Ringle, C. M., & Sarstedt, M. (2010). Structural Modeling of Heterogeneous Data with Partial Least Squares. In N. K. Malhotra (Ed.), Review of Marketing Research (Vol. 7, pp. 255-296). Armonk: Sharpe.

[32] Rigdon, E. E., Ringle, C. M., Sarstedt, M., & Gudergan, S. P. (2011). Assessing Heterogeneity in Customer Satisfaction Studies: Across Industry Similarities and Within Industry Differences. Advances in International Marketing, 22, 169-194.

[33] Ringle, C., Sarstedt, M., & Zimmermann, L. (2011). Customer Satisfaction with Commercial Airlines: The Role of Perceived Safety and Purpose of Travel. Journal of Marketing Theory and Practice, 19(4), 459-472.

[34] Ringle, C. M. (2006). [Segmentation for Path Models and Unobserved Heterogeneity: The Finite Mixture Partial Least Squares Approach].

[35] Ringle, C. M., Götz, O., Wetzels, M., & Wilson, B. (2009). On the Use of Formative Measurement Specifications in Structural Equation Modeling: A Monte Carlo Simulation Study to Compare Covariance-based and Partial Least Squares Model Estimation Methodologies METEOR Research Memoranda (RM/09/014): Maastricht University.

[36] Ringle, C. M., Sarstedt, M., & Mooi, E. A. (2010). Response-Based Segmentation Using Finite Mixture Partial Least Squares: Theoretical Foundations and an Application to American Customer Satisfaction Index Data. Annals of Information Systems, 8, 19-49.

[37] Ringle, C. M., Sarstedt, M., & Schlittgen, R. (2010). Finite Mixture and Genetic Algorithm Segmentation in Partial Least Squares Path Modeling: Identification of Multiple Segments in a Complex Path Model. In A. Fink, B. Lausen, W. Seidel & A. Ultsch (Eds.), Advances in Data Analysis, Data Handling and Business Intelligence (pp. 167-176). Berlin-Heidelberg: Springer.

[38] Ringle, C. M., Sarstedt, M., & Schlittgen, R. (2014). Genetic Algorithm Segmentation in Partial Least Squares Structural Equation Modeling. OR Spectrum, forthcoming. doi: 10.1007/s00291-013-0320-0

[39] Ringle, C. M., Sarstedt, M., Schlittgen, R., & Taylor, C. R. (2012). PLS Path Modeling and Evolutionary Segmentation. Journal of Business Research, forthcoming.

[40] Ringle, C. M., Sarstedt, M., & Straub, D. W. (2012). A Critical Look at the Use of PLS-SEM in MIS Quarterly. MIS Quarterly, 36(1), iii-xiv.

[41] Ringle, C. M., Völckner, F., Sattler, H., & Reinstrom, C. (2012). Do We Really Know How to Manage Brand Extension Success? Management@TUHH Research Papers Series (Vol. 8). Hamburg: Hamburg University of Technology (TUHH).

[42] Ringle, C. M., Wende, S., & Will, A. (2005). SmartPLS 2.0: www.smartpls.de.

[43] Ringle, C. M., Wende, S., & Will, A. (2010). Finite Mixture Partial Least Squares Analysis: Methodology and Numerical Examples. In V. Esposito Vinzi, W. W. Chin, J. Henseler & H. Wang (Eds.), Handbook of Partial Least Squares: Concepts, Methods and Applications in Marketing and Related Fields (pp. 195-218). Berlin et al.: Springer.

[44] Sarstedt, M. (2008). A Review of Recent Approaches for Capturing Heterogeneity in Partial Least Squares Path Modelling. Journal of Modelling in Management, 3(2), 140-161.

[45] Sarstedt, M., Becker, J.-M., Ringle, C. M., & Schwaiger, M. (2011). Uncovering and Treating Unobserved Heterogeneity with FIMIX-PLS: Which Model Selection Criterion Provides an Appropriate Number of Segments? Schmalenbach Business Review, 63(1), 34-62.

[46] Sarstedt, M., Henseler, J., & Ringle, C. (2011). Multi-group analysis in partial least squares (PLS) path modeling: alternative methods and empirical results. Advances in International Marketing, 22, 195-218. doi: 10.1108/S1474-7979(2011)0000022012

[47] Sarstedt, M., & Ringle, C. M. (2010). Treating Unobserved Heterogeneity in PLS Path Modelling: A Comparison of FIMIX-PLS with Different Data Analysis Strategies. Journal of Applied Statistics, 37(8), 1299-1318.

[48] Sarstedt, M., Ringle, C. M., Raithel, S., & Gudergan, S. P. (2012). In Pursuit of Understanding What Drives Fan Satisfaction Management@TUHH Research Papers Series (Vol. 7). Hamburg: Hamburg University of Technology (TUHH).

[49] Sarstedt, M., Schwaiger, M., & Ringle, C. M. (2009). Do We Fully Understand the Critical Success Factors of Customer Satisfaction with Industrial Goods? - Extending Festge and Schwaiger's Model to Account for Unobserved Heterogeneity. Journal of Business Market Management, 3(3), 185-206.

[50] Sarstedt, M., & Wilczynski, P. (2009). More for Less? A Comparison of Single-Item and Multi-Item Measures. Die Betriebswirtschaft, 69(2), 211-227.

[51] Sattler, H., Völckner, F., Riediger, C., & Ringle, C. M. (2010). The Impact of Brand Extension Success Factors on Brand Extension Price Premium. International Journal of Research in Marketing, 27(4), 319-328

[52] van Riel, A. C. R., Semeijn, J., Hammedi, W., & Henseler, J. (2011). Technology-based service proposal screening and decision-making effectiveness. Management Decision, 49(5), 762-783. doi: 10.1108/00251741111130841

[53] Völckner, F., Sattler, H., Hennig-Thurau, T., & Ringle, C. M. (2010). The Role of Parent Brand Quality for Service Brand Extension Success. Journal of Service Research, 13(4), 359-361.

[54] Wan Mohamad Asyraf Bin Wan Afthanorhan, Sabri Ahmad. (2013). Modelling The Multimediator On Motivation Among Youth In Higher Education Institution Towards Volunteerism Program Mathematical Theory and Modeling (MTM), 3(7), 7.

[55] Wan Mohamad Asyraf Bin Wan Afthanorhan, Sabri Ahmad. (2013). Modelling-The-Multigroup-Moderator-Mediator-On-Motivation-Among-Youth-In-Higher Education Institution Towards Volunteerism Program. International Journal of Scientific & Engineering Research (IJSER), 4(7), 5.

[56] Wan Mohamad Asyraf Bin Wan Afthanorhan, Sabri Ahmad. (2013). Modelling A High Reliability And Validity By Using Confirmatory Factor Analysis On Five Latent Construct: Volunteerism Program. International Research Journal Advanced Engineer and Scientific Technology (IRJAEST), 1(1), 7.

[57] Wan Mohamad Asyraf Bin Wan Afthanorhan. (2013). A Comparison of Partial Least Square Structural Equation Modeling (PLS-SEM) and Covariance Based Structural Equation Modeling (CB-SEM) for Confirmatory Factor Analysis International Journal Engineering and Science Innovative Technologies (IJESIT), 2(5), 8.

[58] Ziggers, G.-W., & Henseler, J. (2009). Inter-firm network capability – how it affects buyer-supplier performance. British Food

I. APPENDIX 2

	Original Sample (O)	Sample Mean (M)	Standard Deviation (STDEV)	Standard Error (STERR)	T Statistics (|O/STERR|)
B1 <- Benefits	0.1221	0.1229	0.0082	0.0082	14.9314
B10 <- Benefits	0.1233	0.1232	0.0069	0.0069	17.8818
B11 <- Benefits	0.1257	0.1254	0.0057	0.0057	21.9852
B12 <- Benefits	0.1224	0.1227	0.0054	0.0054	22.8467
B13 <- Benefits	0.0987	0.0986	0.0075	0.0075	13.1601
B14 <- Benefits	0.1539	0.1541	0.0095	0.0095	16.2673
B3 <- Benefits	0.1087	0.1088	0.0064	0.0064	17.0276
B4 <- Benefits	0.1154	0.1157	0.0068	0.0068	17.015
B5 <- Benefits	0.122	0.1223	0.0067	0.0067	18.194
B6 <- Benefits	0.1279	0.1281	0.0058	0.0058	21.9589
B9 <- Benefits	0.122	0.1221	0.0068	0.0068	17.8339
Bar1 <- Barrier	0.3152	0.3123	0.0415	0.0415	7.6027
Bar2 <- Barrier	0.3439	0.3412	0.0345	0.0345	9.9738
Bar3 <- Barrier	0.2925	0.2913	0.0325	0.0325	8.9939
Bar4 <- Barrier	0.3567	0.3571	0.0568	0.0568	6.2781
C1 <- Challenges	0.2111	0.2102	0.0358	0.0358	5.8973
C2 <- Challenges	0.1343	0.1294	0.042	0.042	3.1944
C3 <- Challenges	0.1582	0.158	0.0386	0.0386	4.0936
C4 <- Challenges	0.2706	0.2718	0.0356	0.0356	7.6071
C5 <- Challenges	0.3147	0.3183	0.0382	0.0382	8.2445
C6 <- Challenges	0.2239	0.2221	0.0415	0.0415	5.3959
G1 <- Goverment	0.2622	0.2633	0.0275	0.0275	9.5362
G2 <- Goverment	0.2516	0.2528	0.02	0.02	12.565
G3 <- Goverment	0.2444	0.2448	0.0159	0.0159	15.3837
G4 <- Goverment	0.2644	0.2639	0.018	0.018	14.7057
G5 <- Goverment	0.1945	0.1937	0.0189	0.0189	10.2687
G6 <- Goverment	0.1229	0.1212	0.0249	0.0249	4.9331
M1 <- Motivation	0.0783	0.0781	0.005	0.005	15.7978
M1 <- MA	0.5167	0.5157	0.018	0.018	28.6383
M10 <- Motivation	0.0994	0.0994	0.003	0.003	33.1169
M10 <- MA	0.6559	0.6572	0.0284	0.0284	23.0902
M11 <- Motivation	0.0948	0.0946	0.0027	0.0027	34.9608
M11 <- MB	0.5722	0.5731	0.0135	0.0135	42.318
M12 <- Motivation	0.0935	0.0933	0.003	0.003	30.7185
M12 <- MB	0.5645	0.5653	0.012	0.012	47.0645
M13 <- Motivation	0.0836	0.0834	0.0046	0.0046	18.0642
M13 <- MC	0.5189	0.5178	0.0153	0.0153	34.0084
M14 <- Motivation	0.0989	0.0989	0.0032	0.0032	30.6576
M14 <- MC	0.6138	0.6152	0.0228	0.0228	26.9504
M15 <- Motivation	0.0919	0.0919	0.0039	0.0039	23.3464
M15 <- MD	0.5572	0.5583	0.0148	0.0148	37.656
M16 <- Motivation	0.0907	0.0906	0.0038	0.0038	24.0964
M16 <- MD	0.5503	0.5504	0.0126	0.0126	43.7935
M2 <- Motivation	0.0999	0.0998	0.0028	0.0028	36.2426
M2 <- ME	0.5556	0.5544	0.0131	0.0131	42.3634
M3 <- Motivation	0.096	0.0962	0.0035	0.0035	27.2471
M3 <- ME	0.5336	0.534	0.0092	0.0092	57.7553
M4 <- Motivation	0.0991	0.0992	0.0032	0.0032	31.1834
M4 <- MF	0.5412	0.5418	0.0102	0.0102	53.3109
M5 <- Motivation	0.1005	0.1003	0.0031	0.0031	32.1663
M5 <- MF	0.5487	0.5483	0.0095	0.0095	57.8436
M6 <- Motivation	0.102	0.1021	0.0036	0.0036	28.5535
M6 <- MG	0.6028	0.6048	0.0171	0.0171	35.3526
M8 <- Motivation	0.0899	0.0895	0.0033	0.0033	26.8922
M8 <- MG	0.5314	0.5299	0.0124	0.0124	42.7398